Driver LCA 75W 900–1800mA one4all lp PRE

21 mm premium series

Product description

_ NEW: lumDATA (DALI-2 part ext. 251, 252 and 253)
_ Dimmable built-in constant current LED driver
_ Dimming range 1 to 100 %
_ For luminaires of protection class I and protection class II
_ Output current adjustable between 900 – 1,800 mA
_ Max. output power 75 W
_ Up to 91 % efficiency
_ Power input on stand-by < 0.15 W
_ Nominal lifetime up to 100,000 h
_ 5 years guarantee (conditions at https://www.tridonic.com/manufacturer-guarantee-conditions)

Housing properties

_ Low profile metal casing with white cover
_ Type of protection IP20

Interfaces

_ one4all (DALI-2 DT 6, DSI, switchDIM, corridorFUNCTION)
_ ready2mains (configuration and dimming via mains)
_ Terminal blocks: 0° push terminals

Functions

_ Adjustable output current in 1-mA-steps (DALI, ready2mains, I-SELECT 2)
_ Fulfills DALI-2 parts: 251 (Luminaire data), 252 (Energy reporting) and 253 (Diagnostics & Maintenance)
_ Constant light output function (CLO)
_ Power-up fading at AC
_ Configurable via ready2mains
_ Switch off the driver with fade2zero
_ Service monitor to log certain events
_ Protective features (overtemperature, short-circuit, overload, no-load, input voltage range, reduced surge amplification)
_ Intelligent Voltage Guard (overvoltage and undervoltage monitoring)
_ Suitable for emergency escape lighting systems acc. to EN 50172

Benefits

_ Flexible configuration via companionSUITE
_ Application-oriented operating window for maximum compatibility
_ Best energy savings due to low stand-by losses and high efficiency
_ Flexible configuration via DALI, ready2mains and I-SELECT 2
_ Reliability proven by lifetime up to 100,000 h and 5 years guarantee (conditions at https://www.tridonic.com/manufacturer-guarantee-conditions)

Typical applications

_ For linear/area lighting in office applications

Website

http://www.tridonic.com/28000660

Driver LCA 75W 900–1800mA one4all lp PRE

21 mm premium series

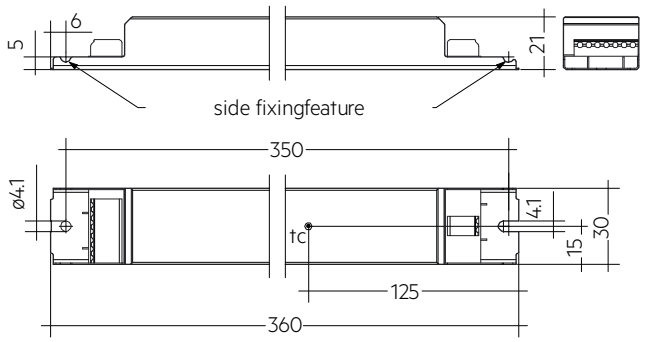

Ordering data

Type	Article number	Packaging, carton	Packaging, pallet	Weight per pc.
LCA 75W 900-1800mA one4all lp PRE	**28000660**	10 pc(s).	760 pc(s).	0.266 kg

Technical data

Rated supply voltage	220 – 240 V
AC voltage range	198 – 264 V
DC voltage range	176 – 280 V
Mains frequency	0 / 50 / 60 Hz
Overvoltage protection	320 V AC, 48 h
Typ. current (at 230 V, 50 Hz, full load) ①②	228 – 363 mA
Typ. current (220 V, 0 Hz, full load, 15 % dimming level) ②	50 – 71 mA
Leakage current (at 230 V, 50 Hz, full load) ①②	< 550 µA
Max. input power	83 W
Typ. efficiency (at 230 V, 50 Hz, full load) ②	91 %
λ (at 230 V, 50 Hz, full load) ①	0.98
Typ. power consumption on stand-by ③	< 0.15 W
Typ. input current in no-load operation	33 mA
Typ. input power in no-load operation	0.41 W
In-rush current (peak / duration)	34 A / 193 µs
THD (at 230 V, 50 Hz, full load) ①	< 8.2 %
Starting time (at 230 V, 50 Hz, full load) ①	< 0.6 s
Starting time (DC mode)	< 0.3 s
Switchover time (AC/DC) ④	< 0.3 s
Turn off time (at 230 V, 50 Hz, full load)	< 4 ms
Output current tolerance ①⑤	± 3 %
Max. output current peak (non-repetitive)	≤ output current + 40 %
Output LF current ripple (< 120 Hz)	± 5 %
Output P_ST_LM (at full load)	≤ 1
Output SVM (at full load)	≤ 0.4
Max. output voltage (U-OUT)	60 V
Dimming range	1 – 100 %
Mains surge capability (between L - N)	1 kV
Mains surge capability (between L/N - PE)	2 kV
Surge voltage at output side (against PE)	< 0.5 kV
Type of protection	IP20
Lifetime	up to 100,000 h
Guarantee (conditions at www.tridonic.com)	5 Year(s)
Dimensions L x W x H	360 x 30 x 21 mm

Approval marks

DALI lumDATA IP20 SELV RoHS

Standards

EN 55015, EN 61000-3-2, EN 61000-3-3, EN 61347-1, EN 61347-2-13, EN 62384, EN 61547, EN 62386-101, EN 62386-102, EN 62386-207 (DALI-2), according to EN 50172, according to EN 60598-2-22

Specific technical data

Type	Output current⑥⑤	Min. output voltage	Max. output voltage	Max. output power	Typ. power consumption (at 230 V, 50 Hz, full load)	Typ. current consumption (at 230 V, 50 Hz, full load)	tc point max.	Ambient temperature ta	I-SELECT 2 resistor value⑦
LCA 75W 900-1800mA one4all lp PRE	900 mA	20 V	50.0 V	45.0 W	50.9 W	228 mA	85 °C	-25 … +65 °C	–
LCA 75W 900-1800mA one4all lp PRE	950 mA	20 V	50.0 V	47.5 W	53.5 W	241 mA	85 °C	-25 … +65 °C	5.26 kΩ
LCA 75W 900-1800mA one4all lp PRE	1,000 mA	20 V	50.0 V	50.0 W	56.2 W	253 mA	85 °C	-25 … +65 °C	5.00 kΩ
LCA 75W 900-1800mA one4all lp PRE	1,050 mA	20 V	50.0 V	52.5 W	58.6 W	263 mA	85 °C	-25 … +65 °C	4.76 kΩ
LCA 75W 900-1800mA one4all lp PRE	1,100 mA	20 V	50.0 V	55.0 W	61.2 W	274 mA	85 °C	-25 … +65 °C	4.55 kΩ
LCA 75W 900-1800mA one4all lp PRE	1,150 mA	20 V	50.0 V	57.5 W	63.9 W	286 mA	80 °C	-25 … +60 °C	4.35 kΩ
LCA 75W 900-1800mA one4all lp PRE	1,200 mA	20 V	50.0 V	60.0 W	65.4 W	296 mA	80 °C	-25 … +60 °C	4.17 kΩ
LCA 75W 900-1800mA one4all lp PRE	1,250 mA	20 V	50.0 V	62.5 W	69.1 W	308 mA	80 °C	-25 … +60 °C	4.00 kΩ
LCA 75W 900-1800mA one4all lp PRE	1,300 mA	20 V	50.0 V	65.0 W	71.5 W	318 mA	80 °C	-25 … +60 °C	3.85 kΩ
LCA 75W 900-1800mA one4all lp PRE	1,350 mA	20 V	50.0 V	67.5 W	74.1 W	329 mA	80 °C	-25 … +60 °C	3.70 kΩ
LCA 75W 900-1800mA one4all lp PRE	1,400 mA	20 V	50.0 V	70.0 W	76.9 W	341 mA	80 °C	-25 … +60 °C	3.57 kΩ
LCA 75W 900-1800mA one4all lp PRE	1,500 mA	20 V	50.0 V	75.0 W	82.1 W	363 mA	75 °C	-25 … +55 °C	3.33 kΩ
LCA 75W 900-1800mA one4all lp PRE	1,600 mA	20 V	46.9 V	75.0 W	81.6 W	361 mA	75 °C	-25 … +55 °C	3.13 kΩ
LCA 75W 900-1800mA one4all lp PRE	1,700 mA	20 V	44.1 V	75.0 W	81.6 W	361 mA	75 °C	-25 … +55 °C	2.94 kΩ
LCA 75W 900-1800mA one4all lp PRE	1,800 mA	20 V	41.7 V	75.0 W	81.8 W	362 mA	75 °C	-25 … +55 °C	0.00 kΩ

① Valid at 100 % dimming level.
② Depending on the selected output current.
③ Depending on the DALI traffic at the interface.
④ Valid for immediate change of power supply type otherwise the starting time is valid.
⑤ Output current is mean value.
⑥ The table only lists a number of possible operating points but does not cover each single point. The output current can be set within the total value range in 1-mA-steps.
⑦ Not compatible with I-SELECT (generation 1). Calculated resistor value.

I-SELECT 2 PLUG PRE / EXC

Accessory

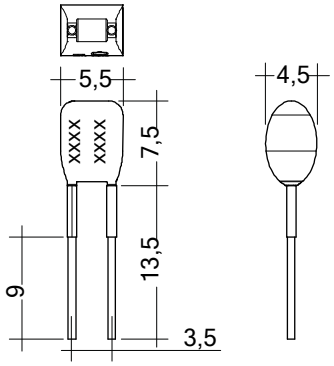

Product description

- Ready-for-use resistor to set output current value
- Compatible with LED driver featuring I-select 2 interface; not compatible with I-SELECT (generation 1)
- Resistor is base insulated
- Resistor power 0.25 W
- Current tolerance ± 2 % additional to output current tolerance
- Compatible with LED driver series PRE and EXC

Example of calculation

- R [kΩ] = 5 V / I_out [mA] x 1000
- E96 resistor value used
- Resistor value tolerance ≤ 1 %; resistor power ≥ 0.1 W; base insulation necessary
- When using a resistor value beyond the specified range, the output current will automatically be set to the minimum value (resistor value too big), respectively to the maximum value (resistor value too small)

Website
http://www.tridonic.com/28001122

Ordering data

Type	Article number	Colour	Marking	Current	Resistor value	Packaging, bag	Weight per pc.
I-SELECT 2 PLUG 900MA BL	**28001122**	Blue	0900 mA	900 mA	5.62 kΩ	10 pc(s).	0.001 kg
I-SELECT 2 PLUG 950MA BL	**28001123**	Blue	0950 mA	950 mA	5.23 kΩ	10 pc(s).	0.001 kg
I-SELECT 2 PLUG 1000MA BL	**28001124**	Blue	1000 mA	1,000 mA	4.99 kΩ	10 pc(s).	0.001 kg
I-SELECT 2 PLUG 1050MA BL	**28001125**	Blue	1050 mA	1,050 mA	4.75 kΩ	10 pc(s).	0.001 kg
I-SELECT 2 PLUG 1100MA BL	**28001126**	Blue	1100 mA	1,100 mA	4.53 kΩ	10 pc(s).	0.001 kg
I-SELECT 2 PLUG 1150MA BL	**28001127**	Blue	1150 mA	1,150 mA	4.32 kΩ	10 pc(s).	0.001 kg
I-SELECT 2 PLUG 1200MA BL	**28001128**	Blue	1200 mA	1,200 mA	4.12 kΩ	10 pc(s).	0.001 kg
I-SELECT 2 PLUG 1250MA BL	**28001129**	Blue	1250 mA	1,250 mA	4.02 kΩ	10 pc(s).	0.001 kg
I-SELECT 2 PLUG 1300MA BL	**28001130**	Blue	1300 mA	1,300 mA	3.83 kΩ	10 pc(s).	0.001 kg
I-SELECT 2 PLUG 1350MA BL	**28001131**	Blue	1350 mA	1,350 mA	3.74 kΩ	10 pc(s).	0.001 kg
I-SELECT 2 PLUG 1400MA BL	**28001132**	Blue	1400 mA	1,400 mA	3.57 kΩ	10 pc(s).	0.001 kg
I-SELECT 2 PLUG 1500MA BL	**28001133**	Blue	1500 mA	1,500 mA	3.32 kΩ	10 pc(s).	0.001 kg
I-SELECT 2 PLUG 1600MA BL	**28001134**	Blue	1600 mA	1,600 mA	3.16 kΩ	10 pc(s).	0.001 kg
I-SELECT 2 PLUG 1700MA BL	**28001135**	Blue	1700 mA	1,700 mA	2.94 kΩ	10 pc(s).	0.001 kg
I-SELECT 2 PLUG 1800MA BL	**28001136**	Blue	1800 mA	1,800 mA	2.80 kΩ	10 pc(s).	0.001 kg
I-SELECT 2 PLUG MAX BL	**28001099**	Blue	MAX	MAX	0.00 kΩ	10 pc(s).	0.001 kg

1. Standards

EN 55015
EN 61000-3-2
EN 61000-3-3
EN 61347-1
EN 61347-2-13
EN 62384
EN 61547
EN 62386-101 (DALI-2)
EN 62386-102 (DALI-2)
EN 62386-207 (DALI-2, including part 251, 252, 253)
According to EN 50172 for use in central battery systems
According to EN 60598-2-22 suitable for emergency lighting installations

2. Thermal details and lifetime

2.1 Expected lifetime

Expected lifetime

Type	Output current	ta	40 °C	45 °C	50 °C	55 °C	60 °C	65 °C
LCA 75W 900-1800mA one4all Ip PRE	900 – 1,100 mA	tc	60 °C	65 °C	70 °C	70 °C	75 °C	85 °C
		Lifetime	> 100,000 h	> 100,000 h	> 100,000 h	90,000 h	75,000 h	50,000 h
	>1,100 – 1,400 mA	tc	60 °C	65 °C	70 °C	75 °C	80 °C	–
		Lifetime	> 100,000 h	> 100,000 h	> 100,000 h	80,000 h	50,000 h	–
	>1,400 – 1,800 mA	tc	65 °C	65 °C	70 °C	75 °C	–	–
		Lifetime	> 100,000 h	> 100,000 h	90,000 h	70,000 h	–	–

The LED driver is designed for a lifetime stated above under reference conditions and with a failure probability of less than 10 %.

The relation of tc to ta temperature depends also on the luminaire design.
If the measured tc temperature is approx. 5 K below tc max., ta temperature should be checked and eventually critical components (e.g. ELCAP) measured. Detailed information on request.

3. Installation / wiring

3.1 Circuit diagram

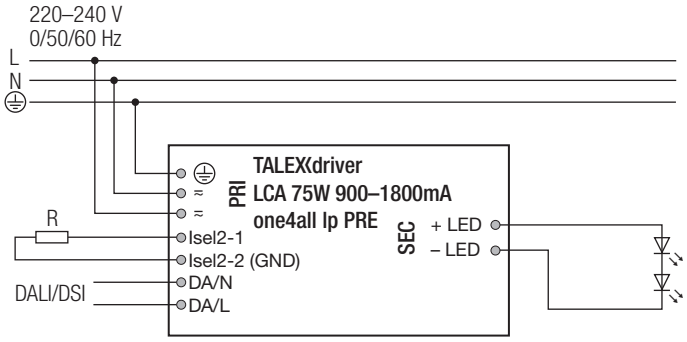

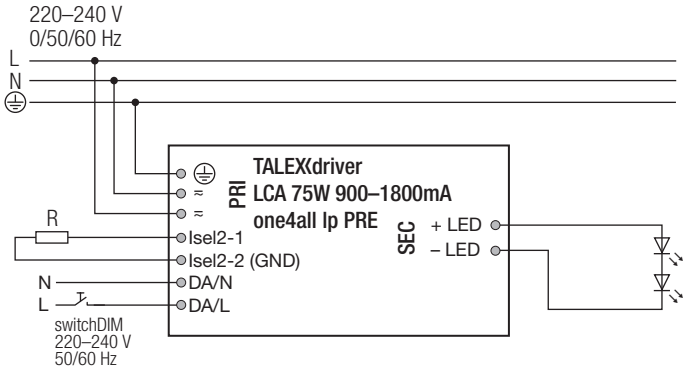

For wiring in dimming operation with ready2mains refer to the ready2mains Gateway datasheet.

3.2 Wiring type and cross section

Solid wire with a cross section of 0.5 – 1.5 mm². Strip 8 – 9 mm of insulation from the cables to ensure perfect operation of terminals.

LED module/LED driver/supply

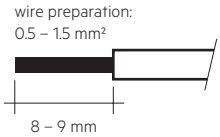

3.3 Loose wiring

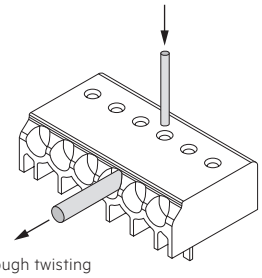

Loosen wire through twisting and pulling or using a Ø 1 mm release tool

3.4 Wiring guidelines

- Run the secondary lines separately from the mains connections and lines to achieve good EMC performance.
- The max. secondary cable length is 2 m (4 m circuit), this applies for LED output as well as for I-SELECT 2.
- For good EMC performance, keep the LED wiring as short as possible.
- Secondary switching is not permitted.
- The LED driver has no inverse-polarity protection on the secondary side. Wrong polarity can damage LED modules with no inverse-polarity protection.
- Wrong wiring of the LED driver can lead to malfunction or irreparable damage.
- To avoid the damage of the Driver, the wiring must be protected against short circuits to earth (sharp edged metal parts, metal cable clips, louver, etc.).

3.5 Hot plug-in

Hot plug-in is not supported due to residual output voltage of > 0 V.
If a LED load is connected the device has to be restarted before the output will be activated again.
This can be done via mains reset or via interface (DALI, DSI, switchDIM, ready2mains).

3.6 Earth connection

The earth connection is conducted as protection earth (PE). The LED driver can be earthed via earth terminal or metal housing. If the LED driver will be earthed, protection earth (PE) has to be used. There is no earth connection required for the functionality of the LED driver. Earth connection is recommended to improve following behaviour:

- Electromagnetic interferences (EMI)
- LED glowing at stand-by
- Transmission of mains transients to the LED output

In general it is recommended to earth the LED driver if the LED module is mounted on earthed luminaire parts respectively heat sinks and thereby representing a high capacity against earth.

3.7 I-SELECT 2 resistors connected via cable

For details see:
http://www.tridonic.com/com/en/download/technical/LCA_PRE_LC_EXC_ProductManual_en.pdf.

4. Electrical values

4.1 Operating window

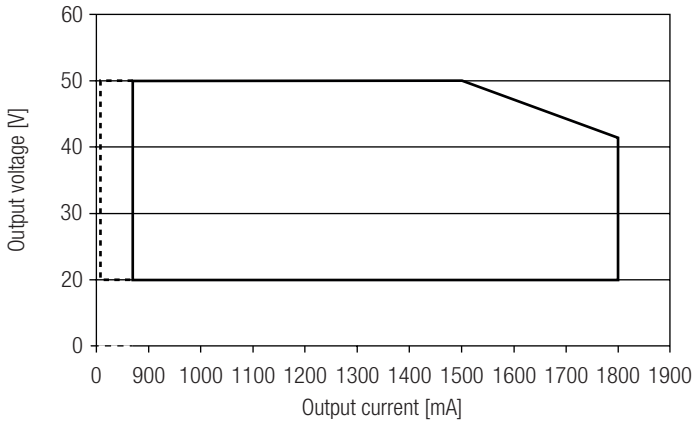

Operating window 100 %
Operating window dimmed

Make sure that the LED driver is operated within the given window under all operating conditions. Special attention needs to be paid at dimming and DC emergency operation as the forward voltage of the connected LED modules varies with the dimming level, due to the implemented amplitude dimming technology. Coming below the specified minimum output voltage of the LED driver may cause the device to shut-down.
See chapter "6.9 DC operation" for more information.

4.2 Efficiency vs load

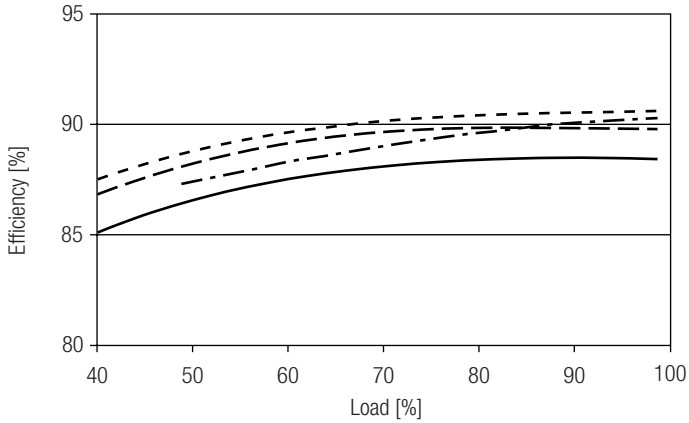

4.3 Power factor vs load

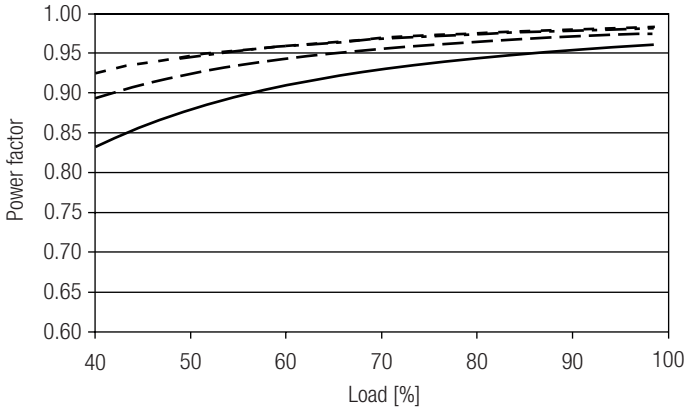

4.4 THD vs load

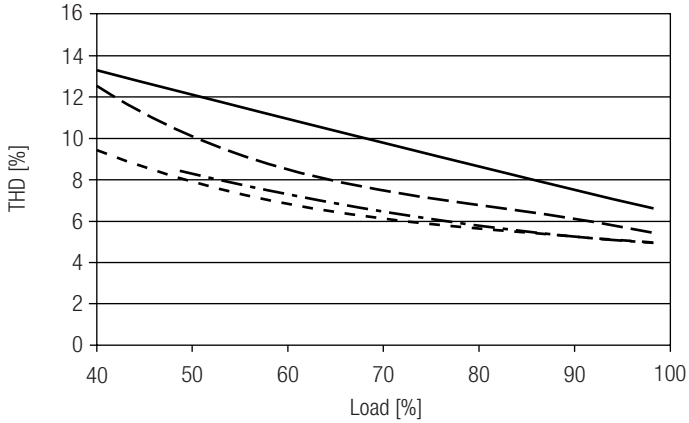

900 mA
1200 mA
1500 mA
1800 mA

100 % load corresponds to the max. output power (full load) according to the table on page 2.

4.5 Maximum loading of automatic circuit breakers in relation to inrush current

Automatic circuit breaker type	C10	C13	C16	C20	B10	B13	B16	B20	Inrush current	
Installation Ø	1.5 mm²	1.5 mm²	2.5 mm²	4 mm²	1.5 mm²	1.5 mm²	2.5 mm²	4 mm²	I_{max}	time
LCA 75W 900-1800mA one4all lp PRE	15	20	25	31	9	12	15	19	34 A	193 µs

These are max. values calculated out of inrush current! Please consider not to exceed the maximum rated continuous current of the circuit breaker.
Calculation uses typical values from ABB series S200 as a reference.
Actual values may differ due to used circuit breaker types and installation environment.

4.6 Harmonic distortion in the mains supply (at 230 V / 50 Hz and full load) in %

	THD	3.	5.	7.	9.	11.
LCA 75W 900-1800mA one4all lp PRE	< 8	< 7	< 3	< 3	< 2	< 2

4.7 Dimming

Dimming range 1 % to 100 %
Digital control with:

- DSI signal: 8 bit Manchester Code
  Speed 1 % to 100 % in 1.4 s
- DALI signal: 16 bit Manchester Code
  Speed 1 % to 100 % in 0.2 s
  Programmable parameter:
  Minimum dimming level
  Maximum dimming level
  Default minimum = 1 %
  Programmable range 1 % ≤ MIN ≤ 100 %
  Default maximum = 100 %
  Programmable range 100 % ≥ MAX ≥ 1 %

Dimming curve is adapted to the eye sensitiveness.
Dimming is realized by amplitude dimming.

4.8 Dimming characteristics

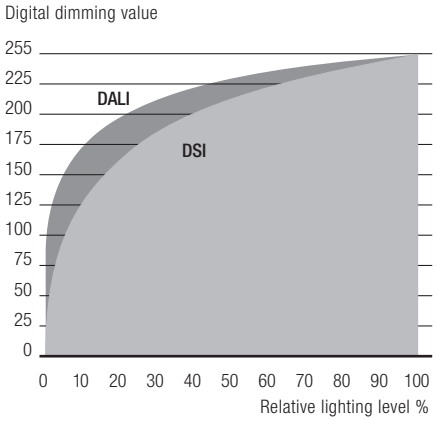

Dimming characteristics as seen by the human eye

5.1 Software / programming

With appropriate software and interface different functions can be activated and various parameters can be configured in the LED driver. The Driver supports the following software and interfaces:

Software / hardware for configuration:
- companionSUITE (deviceGENERATOR, deviceCONFIGURATOR, deviceANALYSER)
- masterCONFIGURATOR
- ready2mains Programmer

Interfaces for data transfer:
- Control input DALI
- Control input ready2mains

5.2 Control input DALI

The control input is non-polar for digital control signals (DALI).
The control signal is not SELV. The control cable has to be installed in accordance to the requirements of low voltage installations.

Digital control with:
- DALI signal: 16 bit
- DSI signal: 8 bit

5.3 Control input ready2mains (L, N)

The digital ready2mains protocol is modulated onto the mains signal which is wired to the mains terminal (L and N).

The configuration is done via the ready2mains Programmer, either directly at the Programmer itself or via a respective software tool. For details on the configuration via ready2mains see the technical information of the Programmer and its tools.
Following tools can be used:
- deviceCONFIGURATOR (companionSUITE)
- masterCONFIGURATOR
- ready2mains Programmer

5.4 I-SELECT 2

By inserting a suitable resistor into the I-SELECT 2 interface, the current value can be adjusted. The relationship between output current and resistor value can be found in the chapter “Accessories I-SELECT 2 Plugs”.
If the resistor is connected by wires a consistent base insulation must be ensured. Furthermore, a max. wire length of 2 m may not be exceeded and potential interferences have to be avoided.

Resistors for the main output current values can be ordered from Tridonic (see accessories).

6. Functions

⊙ companionSUITE:
DALI-USB, ready2mains Programmer
The companionSUITE with deviceGENERATOR, deviceCONFIGURATOR and deviceANALYSER is available via our WEB page:
https://www.tridonic.com/com/en/products/companionsuite.asp

◈ masterCONFIGURATOR:
DALI-USB, ready2mains Programmer (in DALI mode)
The masterCONFIGURATOR is available via our WEB page:
https://www.tridonic.com/com/en/software-masterconfigurator.asp

Icon	Function	DALI-2		ready2mains
	OEM Identification	⊙	◈	⊙
	OEM GTIN	⊙	◈	⊙
	Luminaire data	⊙	–	–
	LED current	⊙	◈	⊙
	Device operating mode	⊙	◈	⊙
	switchDIM	⊙	◈	⊙
	corridorFUNCTION	⊙	◈	⊙
	Constant light output (CLO)	⊙	◈	⊙
	DC level	⊙	◈	⊙
	Enhanced power on level (ePOL)	⊙	◈	⊙
	DALI default parameters	⊙	◈	–
	Scenes and groups	⊙	◈	–
	fade2zero	⊙	–	–
	Power-up fading	⊙	–	–
	Intelligent voltage guard (IVG)	⊙	◈	⊙
	Dimming curve	⊙	–	–

6.1 OEM Identification

The OEM (Original Equipment Manufacturer) can set his own identification number.
DALI Part 251: Memory bank 1 extension.

6.2 OEM GTIN

The Original Equipment Manufacturer (OEM) can set his own Global Trade Item Number (GTIN).
DALI Part 251: Memory bank 1 extension.

6.3 Luminaire data

This function provides the asset management with accurate data about the luminaire.
DALI Part 251: Memory bank 1 extension.

6.4 LED current

The LED output current must be adapted to the connected LED module. The value is limited by the current range of the respective device.

The output current of the LED driver can be adjusted in a certain range. For adjustment there are 4 options available.

Option 1: DALI
Adjustment is done by companionSUITE or by masterCONFIGURATOR.

Option 2: I-SELECT 2
By inserting a suitable resistor into the I-SELECT 2 interface, the current value can be adjusted.

Option 3: ready2mains
Adjustment is done by the ready2mains programmer and the corresponding configuration software (see ready2mains documentation).

The priority for current adjustment methods is DALI (highest priority), I-SELECT 2 and ready2mains (lowest priority).

6.5 Device operating mode

A Tridonic Driver supports several control signals.
These control signals are automatically detected and the mode is adapted.
If only one special device mode is required, this mode can be selected.
“Automatic detection” is the default setting.

6.6 switchDIM

Integrated switchDIM function allows a direct connection of a pushbutton for dimming and switching.
Brief push (< 0.6 s) switches LED driver ON and OFF. The dimm level is saved at power-down and restored at power-up. When the pushbutton is held, LED modules are dimmed. After repush the LED modules are dimmed in the opposite direction.
In installations with LED drivers with different dimming levels or opposite dimming directions (e.g. after a system extension), all LED drivers can be synchronized to 50 % dimming level by a 10 s push.
Use of pushbutton with indicator lamp is not permitted.

switchDIM 2
Version 2 has now the possibility to define different fade times used for short button press events. So the fade time to set memory level (if wake-up from standby) as well as the fade time to switch off can now be configured.

6.7 corridorFUNCTION

With the corridorFUNCTION and a commercially available motion detector, it is easy to adapt the lighting in one area to its use.
That is, when the area is entered by a person, the lighting dims instantly to the desired brightness and is available in full strength.
After the area is left by the person, the brightness dims slowly to a smaller value or switches off completely.
The individual parameters of the desired profile, such as brightness values or delay times, can be adjusted flexibly and individually.

6.8 Constant Light Output (CLO)

With this function the light output of the LED module can be kept equal over the lifetime.
The light output of an LED module reduces over the course of its lifetime.
The Constant Light Output (CLO) function compensates for this natural decline by constantly increasing the output current of the LED driver throughout its lifetime.
CLO shall be achieved by limitation of the LED current at the commissioning of the LED driver and providing a linear interpolation of the current over the time, depending on the data points given by the user.

6.9 DC operation

In emergency light systems with a central battery supply the DC recognition function uses the input voltage to detect if emergency mode is present.
The LED driver then automatically switches to DC mode and dims the light to the defined DC level.
Without DC recognition different and more complex solutions would have to be applied in order to detect emergency mode.
DC recognition is integrated in the device as standard.
No additional commissioning is necessary for activation.

This is a safety-relevant parameter.
The setting is relevant for the dimensioning of the central battery system.

The LED driver is designed to operate on DC voltage and pulsed DC voltage. For a reliable operation, make sure that also in DC emergency operation the LED driver is run within the specified conditions as stated in chapter "4.1 operating window".

Light output level in DC operation: programmable 1 – 100 %
(factory default = 15 %, EOF_i = 0.13).

The voltage-dependent input current of Driver incl. LED module is depending on the used load.

The voltage-dependent no-load current of Driver (without or defect LED module) is for:
AC: < 32.8 mA
DC: < 2.8 mA

In DC operation dimming mode can be activated.
If Dimming on DC is activated the requirements of the DC recognition function are ignored.
Even if DC is detected, the LED driver continues to behave as in AC mode

- The present dimming level is retained
- An emergency light level defined for the DC recognition function (DC level) is ignored
- Control signals via DALI continue to be executed

If Dimming on DC is activated then emergency mode is not recognised.
The device no longer automatically switches to the emergency light level.

6.10 Enhanced power on level (ePOL)

The Enhanced Power On Level parameter defines the power level that is set automatically when power is restored after a power failure.
The Enhanced Power On Level can be set to a fixed value (0 – 100 %) or can recall the memory value.
The memory value is the last value the LED driver was set to before the power failure.
This value applies not only in DALI device operating mode, but also in the device operating mode switchDIM.

6.11 DALI default parameters

In order for all luminaires to react the same for each operation (switching, dimming, scene recall ...), these values must be set the same.
These DALI standard parameters are supported by every DALI-2 device.

6.12 Scenes and groups

Each device can be a member of up to 16 groups.
Also, 16 different scene values can be stored in each device.

6.13 fade2zero

When the Driver is switched off, fade2zero allows a smooth dimming down to almost zero.
Activate the fade2zero function when programming with companionSUITE and set a DALI fade time. fade2zero only works if the minimum dimming level of the Driver is the default value.
The device then dims to far below the limit of its working window (dimming range).
This function is deactivated by default.

6.14 Power-up fading

The power-up function offers the opportunity to modify the on behavior.
The time for fading on can be adjusted in a range of 0.2 to 16 seconds.
According to this value, the device dims from 0 % up to the power-on level.
By factory default no fading time is set (= 0 seconds).

6.15 Dimming curve

DALI:
The desired dimming behaviour is selected via two different dimming curves (logarithmic or linear).
The default setting of the dimming behaviour is logarithmic.

7. Protective features

7.1 Intelligent temperature guard (ITG)

The Intelligent temperature guard (ITG) function provides effective protection against thermal overloads by slowly reducing the output if a defined internal temperature is exceeded.
The reduction of overtemperatures takes place in small steps every two minutes. As soon as the temperature drops again, the output power is gradually increased every 10 minutes.
On DC operation this function is deactivated to fulfill emergency requirements.

7.2 Intelligent Voltage Guard (IVG)

The Intelligent Voltage Guard (IVG) function warns of possible damage due to overvoltage or undervoltage.
The mains voltage is constantly monitored and if necessary appropriate responses are made:

- If the mains voltage is too low (< 70 V), the LED driver is switched off.
- At a mains voltage between 70 and 140 V, the LED driver switches off and on again on a non-cyclic basis.
- In case of an overvoltage (> 318 V), the LED driver sends feedback via DALI.

7.3 Short-circuit behaviour

In case of a short-circuit at the LED output the LED output is switched off.
After restart of the LED driver the output will be activated again. The restart can either be done via mains reset or via interface (DALI, DSI, switchDIM, ready2mains)

7.4 No-load operation

The LED driver will not be damaged in no-load operation. The output will be deactivated and is therefore free of voltage. If a LED load is connected the device has to be restarted before the output will be activated again.

7.5 Overload protection

If the maximum load is exceeded by a defined internal limit, the LED driver turns off the LED output.
After restart of the LED driver the output will be activated again.
The restart can either be done via mains reset or via interface (DALI, DSI, switchDIM, ready2mains).

7.6 Insulation between terminals

Insulation	Mains	PE	LED	DALI
Mains	–	basic	double	basic
PE	basic	–	basic	basic
LED	double	basic	–	double
DALI	basic	basic	double	–

basic ... represents basic insulation.
double ... represents double or reinforced insulation.

8. Miscellaneous

8.1 Insulation and electric strength testing of luminaires

Electronic devices can be damaged by high voltage. This has to be considered during the routine testing of the luminaires in production.

According to IEC 60598-1 Annex Q (informative only!) or ENEC 303-Annex A, each luminaire should be submitted to an insulation test with 500 V DC for 1 second. This test voltage should be connected between the interconnected phase and neutral terminals and the earth terminal.
The insulation resistance must be at least 2 MΩ.

As an alternative, IEC 60598-1 Annex Q describes a test of the electrical strength with 1500 V AC (or 1.414 x 1500 V DC). To avoid damage to the electronic devices this test must not be conducted.

8.2 Conditions of use and storage

Humidity:	5 % up to max. 85 %, not condensed (max. 56 days/year at 85 %)
Storage temperature:	-40 °C up to max. +80 °C

The devices have to be acclimatised to the specified temperature range (ta) before they can be operated.

The LED driver is declared as inbuilt LED controlgear, meaning it is intended to be used within a luminaire enclosure.
If the product is used outside a luminaire, the installation must provide suitable protection for people and environment (e.g. in illuminated ceilings).

8.3 Maximum number of switching cycles

All LED driver are tested with 50,000 switching cycles.
The actually achieved number of switching cycles is significantly higher.

8.4 Additional information

Additional technical information at www.tridonic.com → Technical Data

Lifetime declarations are informative and represent no warranty claim.
No warranty if device was opened.