TRIDONIC

EM converterLED BASIC MH/LiFePO4 250 V

Ausführung BASIC

Product description

_ Self contained emergency lighting LED driver for manual testing
_ For LED modules with a forward voltage of 50 – 250 V
_ Low profile casing (21 x 30 mm cross-section)
_ For luminaire installation
_ EM = Emergency
_ Nominal lifetime up to 100,000 h
_ 5 years guarantee (conditions at https://www.tridonic.com/manufacturer-guarantee-conditions)

Properties

_ Non maintained operation
_ 1 or 3 h rated duration
_ Operating time selectable with plug (duration link)
_ Compatible with all dimmable and non-dimmable constant current LED driver (see data sheet, LED driver compatibility)
_ 3-pole technology: 2-pole LED module changeover and delayed power switching for the LED driver
_ Automatic shutdown of output if LED load is out of range
_ Constant power output
_ Maximum light output for all LED modules
_ Electronic charge system
_ Deep discharge protection
_ Short-circuit-proof battery connection
_ Polarity reversal protection for battery provided by 3-pole connector
_ Automatic detection of the connected battery technology (NiMH or LiFePO4 batteries)

Batteries

_ High-temperature cells
_ NiMH or LiFePO4 batteries
_ LA or 18650 cells
_ 4-year design life for NiMH batteries
_ 1 years guarantee for NiMH batteries (conditions at https://www.tridonic.com/manufacturer-guarantee-conditions)
_ 4 – 8 years design life for LiFePO4 batteries
_ 3 years guarantee for LiFePO4 batteries (conditions at https://www.tridonic.com/manufacturer-guarantee-conditions)
_ LiFePO4 batteries with Tridonic LiFeGuard
_ For battery compatibility refer to data sheet, battery selection

Website

http://www.tridonic.com/89800709

EM converterLED BASIC MH/LiFePO4 250 V

Ausführung BASIC

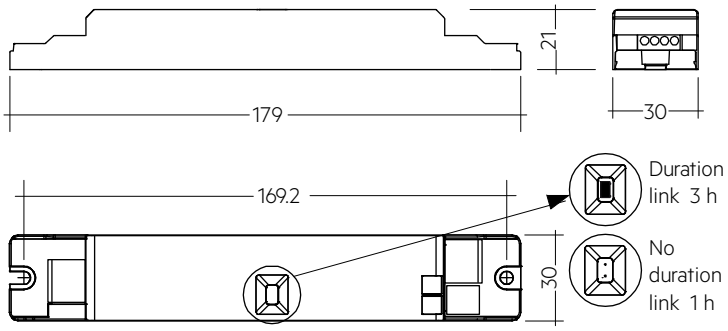

Note: Supply of control gear with duration link in 3 hours position. Remove duration link for duration of 1 h. Duration link must be set before battery and mains connection.

Ordering data

Type	Article number	Rated duration	Packaging, carton	Packaging, pallet	Weight per pc.	Dimensions L x W x H
EM converterLED BASIC 202A MH/LiFePO4 250	**89800709**	1/3 h	10 pc(s).	1,600 pc(s).	0.07 kg	179 x 30 x 21 mm
EM converterLED BASIC 203 MH/LiFePO4 250V	**89800592**	1/3 h	10 pc(s).	1,600 pc(s).	0.07 kg	179 x 30 x 21 mm
EM converterLED BASIC 204 MH/LiFePO4 250V	**89800581**	1/3 h	10 pc(s).	1,600 pc(s).	0.07 kg	179 x 30 x 21 mm
EM converterLED BASIC 205 MH/LiFePO4 250V	**89800582**	1/3 h	10 pc(s).	1,600 pc(s).	0.07 kg	179 x 30 x 21 mm

Technical data

Rated supply voltage	220 – 240 V
AC voltage range	198 – 264 V
Mains frequency	50 / 60 Hz
Forward voltage range LED module	50 – 250 V
Output current	Refer to data sheet
Starting time	< 0.5 s from detection of emergency event
Overvoltage protection	320 V (for 48 h)
U-OUT (including open- / short-circuit and double load)	280 V
Max. open circuit voltage	280 V
Battery charging time ①②	24 h
Ambient temperature ta	-5 … +55 °C
Max. casing temperature tc	75 °C
Mains voltage changeover threshold	According to EN 60598-2-22
Mains surge capability (between L - N)	1 kV
Mains surge capability (between L/N - PE)	2 kV
Type of protection	IP20
Lifetime	up to 100,000 h
Guarantee (conditions at www.tridonic.com)	5 Year(s)
Dimensions L x W x H	179 x 30 x 21 mm

Approval marks

Standards

according to EN 50172, according to EN 60598-2-22, EN 61347-1, EN 61347-2-13, EN 61347-2-7, EN 55015, EN 61000-3-2, EN 61000-3-3, EN 61547, EN 60068-2-64, EN 60068-2-29, EN 60068-2-30, EN 62384

Specific technical data

Type	Battery technology	Rated duration	Typ. λ (at 230 V, 50 Hz)	Typ. output power P emergency	Mains current in charging operation			Mains power in charging operation		
					Initial charge	Fast recharge	Trickle③ charge	Initial charge	Fast recharge	Trickle③ charge
EM converterLED BASIC 202A MH/LiFePO4 250	NiMH	1 h	0.60C	2.3 W	17 mA	17 mA	17 / 12 mA	2.4 W	2.4 W	2.4 / 1.4 W
EM converterLED BASIC 202A MH/LiFePO4 250	NiMH	3 h	0.60C	2.3 W	18 mA	18 mA	18 / 12 mA	2.6 W	2.6 W	2.6 / 1.4 W
EM converterLED BASIC 202A MH/LiFePO4 250	LiFePO4	1 h	0.60C	2.3 W	17 mA	17 mA	17 / 12 mA	2.1 W	2.1 W	2.1 / 1.4 W
EM converterLED BASIC 202A MH/LiFePO4 250	LiFePO4	3 h	0.60C	2.3 W	20 mA	20 mA	20 / 12 mA	2.9 W	2.9 W	2.9 / 1.4 W
EM converterLED BASIC 203 MH/LiFePO4 250V	NiMH	1 h	0.60C	2.5 W	17 mA	17 mA	17 / 12 mA	2.4 W	2.4 W	2.4 / 1.4 W
EM converterLED BASIC 203 MH/LiFePO4 250V	NiMH	3 h	0.60C	2.5 W	19 mA	19 mA	19 / 12 mA	2.9 W	2.9 W	2.9 / 1.4 W
EM converterLED BASIC 203 MH/LiFePO4 250V	LiFePO4	1 h	0.60C	3.1 W	20 mA	20 mA	20 / 12 mA	2.8 W	2.8 W	2.8 / 1.4 W
EM converterLED BASIC 203 MH/LiFePO4 250V	LiFePO4	3 h	0.60C	3.1 W	25 mA	25 mA	25 / 12 mA	3.9 W	3.9 W	3.9 / 1.4 W
EM converterLED BASIC 204 MH/LiFePO4 250V	NiMH	1 h	0.65C	3.5 W	18 mA	18 mA	18 / 12 mA	2.5 W	2.5 W	2.5 / 1.4 W
EM converterLED BASIC 204 MH/LiFePO4 250V	NiMH	3 h	0.65C	3.5 W	21 mA	21 mA	21 / 12 mA	3.2 W	3.2 W	3.2 / 1.4 W
EM converterLED BASIC 204 MH/LiFePO4 250V	LiFePO4	1 h	0.65C	3.8 W	20 mA	20 mA	20 / 12 mA	2.8 W	2.8 W	2.8 / 1.4 W
EM converterLED BASIC 204 MH/LiFePO4 250V	LiFePO4	3 h	0.65C	3.8 W	26 mA	26 mA	26 / 12 mA	3.9 W	3.9 W	3.9 / 1.4 W
EM converterLED BASIC 205 MH/LiFePO4 250V	NiMH	1 h	0.65C	4.5 W	19 mA	19 mA	19 / 12 mA	2.7 W	2.7 W	2.7 / 1.4 W
EM converterLED BASIC 205 MH/LiFePO4 250V	NiMH	3 h	0.65C	4.5 W	22 mA	22 mA	22 / 12 mA	3.3 W	3.3 W	3.3 / 1.4 W
EM converterLED BASIC 205 MH/LiFePO4 250V	LiFePO4	1 h	0.65C	4.5 W	20 mA	20 mA	20 / 12 mA	2.8 W	2.8 W	2.8 / 1.4 W
EM converterLED BASIC 205 MH/LiFePO4 250V	LiFePO4	3 h	0.65C	4.5 W	26 mA	26 mA	26 / 12 mA	3.9 W	3.9 W	3.9 / 1.4 W

① 16 h battery charging time for 2 h emergency lighting function according to AS 2293.
② 12 h battery charging time for 2 h emergency lighting function when used with LiFePO4 batteries.
③ In case of NiMH batteries: Intermittent charge is used. Value 1 is for 4 min. charge on / Value 2 is for 16 min. charge off. In case of LiFePO4 batteries voltage dependent constant current charging is used.

EMcLED Strain-relief set 240x43x30mm

Accessory

Product description

- Optional strain-relief set for independent applications
- Transforms the LED driver into a fully class II compatible LED driver (e.g. ceiling installation)
- Easy and tool-free mounting to the LED driver, screwless cable-clamp channels with strain-relief (240 x 43 x 30 mm)

Website
http://www.tridonic.com/28003813

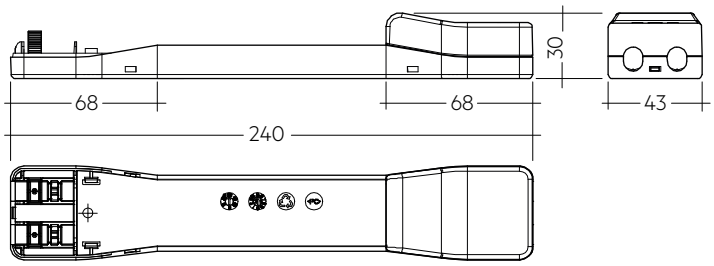

Permissible cable jacket diameter 2.2 – 9 mm

Ordering data

Type	Article number	Packaging, carton	Weight per pc.
EM cLED SR	**28003813**	10 pc(s).	0.08 kg

Approval marks

Test switch EM3

Accessory

Product description
_ For connection to the emergency lighting unit
_ For checking the device function
_ Plug connection
_ Dielectric strength: 1,500 V AC for 60 seconds

Website
http://www.tridonic.com/89899956

Ordering data

Type	Article number	Packaging, bag	Packaging, carton	Weight per pc.
Test switch EM 3	**89899956**	25 pc(s).	200 pc(s).	0.01 kg

Approval marks

RoHS

Status indication green LED EM CON

Accessory

Product description
_ A green LED indicates that charging current is flowing into the battery
_ 0.3 / 1.0 m cable length
_ Plug connection

Website
http://www.tridonic.com/89800269

Ordering data

Type	Article number	Packaging, bag	Packaging, carton	Weight per pc.
LED EM green, 1.0 m CON	**89800269**	25 pc(s).	200 pc(s).	0.015 kg
LED EM green, HO 1.0 m CON	**89800271**	25 pc(s).	200 pc(s).	0.015 kg
LED EM green, 0.6 m CON	**89800472**	25 pc(s).	200 pc(s).	0.009 kg
LED EM green, HO 0.6 m CON	**89800473**	25 pc(s).	200 pc(s).	0.009 kg
LED EM green, 0.3 m CON	**89800270**	25 pc(s).	200 pc(s).	0.005 kg
LED EM green, HO 0.3 m CON	**89800272**	25 pc(s).	200 pc(s).	0.005 kg

Connection cable LiFePO4

Accessory

Product description
_ Extension cable for LiFePO4 batteries
_ Cable length 500 mm
_ 3-pole plug connection

Website
http://www.tridonic.com/28002461

Ordering data

Type	Article number	Packaging, bag	Packaging, carton	Weight per pc.
EXTENSION CABLE LiFePO4 500mm	**28002461**	10 pc(s).	200 pc(s).	0.01 kg

Connection cable NiMH

Accessory

Product description
_ Connection cable for NiMH batteries
_ Cable length 500 mm
_ 2-pole plug connection for batteries and 3-pole plug connection for LED driver

Website
http://www.tridonic.com/28002462

Ordering data

Type	Article number	Packaging, bag	Packaging, carton	Weight per pc.
CONNECTION CABLE NiMH 500mm	**28002462**	10 pc(s).	200 pc(s).	0.015 kg

1. Standards

- EN 61347-1
- EN 61347-2-13
- EN 61347-2-7
- EN 55015
- EN 61000-3-2
- EN 61000-3-3
- EN 61547
- EN 60068-2-64
- EN 60068-2-29
- EN 60068-2-30
- EN 62384
- according to EN 50172
- according to EN 60598-2-22

Meaning of marking ◎
Double or reinforced insulation for built-in electronic LED drivers. The control gear relies upon the luminaire enclosure for protection against accidental contact with live parts.

1.1 Glow-wire test

according to EN 61347-1 with increased temperature of 850 °C passed.

1.2 Insulation and electric strength testing of luminaires

Electronic LED-drivers can be damaged by high voltage. This has to be considered during the routine testing of the luminaires in production.

According to IEC 60598-1 Annex Q (informative only!) or ENEC 303-Annex A, each luminaire should be submitted to an insulation test with 500 VDC for 1 second. This test voltage should be connected between the interconnected phase and neutral terminals and the earth terminal. The insulation resistance must be at least 2 MΩ.

As an alternative, IEC 60598-1 Annex Q describes a test of the electrical strength with 1,500 VAC (or 1,414 x 1,500 VDC). To avoid damage to the electronic devices this test **must not be conducted**.

2. Thermal details and lifetime

2.1 Lifetime

Average lifetime 50,000 hours under rated conditions with a failure rate of less than 10 %. Average failure rate of 0.2 % per 1000 operating hours.

Expected lifetime with NiMH batteries

EM converterLED BASIC 202A	tc	65°C	70°C	75°C
MH/LiFePO4 250V	lifetime	> 100,000 h	> 100,000 h	94,000 h
EM converterLED BASIC 203	tc	65 °C	70 °C	75 °C
MH/LiFePO4 250V	lifetime	> 100,000 h	> 100,000 h	87,000 h
EM converterLED BASIC 204	tc	65 °C	70 °C	75 °C
MH/LiFePO4 250V	lifetime	> 100,000 h	> 100,000 h	84,000 h
EM converterLED BASIC 205	tc	65 °C	70 °C	75 °C
MH/LiFePO4 250V	lifetime	> 100,000 h	> 100,000 h	80,000 h

Expected lifetime with $LiFePO_4$ batteries

EM converterLED BASIC 202A	tc	65°C	70°C	75°C
MH/LiFePO4 250V	lifetime	> 100,000 h	> 100,000 h	97,000 h
EM converterLED BASIC 203	tc	65 °C	70 °C	75 °C
MH/LiFePO4 250V	lifetime	> 100,000 h	> 100,000 h	82,000 h
EM converterLED BASIC 204	tc	65 °C	70 °C	75 °C
MH/LiFePO4 250V	lifetime	> 100,000 h	> 100,000 h	82,000 h
EM converterLED BASIC 205	tc	65 °C	70 °C	75 °C
MH/LiFePO4 250V	lifetime	> 100,000 h	> 100,000 h	81,000 h

The emergency lighting LED driver is designed for a lifetime stated above under reference conditions and with a failure probability of less than 10 %.

The relation of tc to ta temperature depends also on the luminaire design. If the measured tc temperature is approx. 5 K below tc max., ta temperature should be checked and eventually critical components (e.g. ELCAP) measured. Detailed information on request.

3. Installation / Wiring

3.1 Wiring diagram

One or more LED modules with a total forward voltage of 50 to 250 V can be connected to the EM converterLED 250V module. These LED module(s), marked with “Emergency” are operated in emergency mode from the associated battery. In normal mains mode all LED modules are operated by the LED driver from the mains supply.

Use of the test switch:
For checking the device function press the test switch for a minimum of 3 seconds.

EM converterLED BASIC with one LED module for non-maintained emergency operation

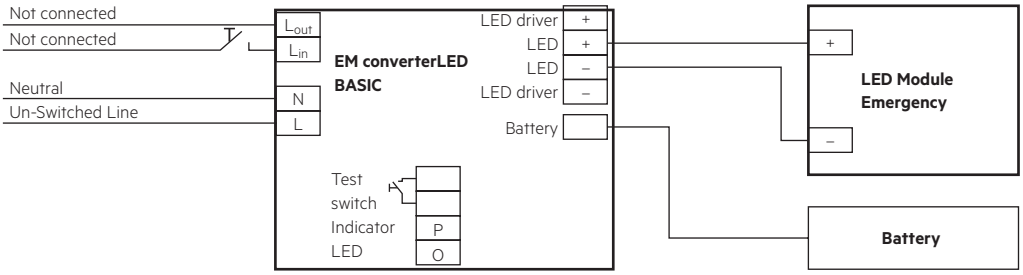

EM converterLED BASIC with a standard LED driver and one LED module for mains and emergency operation

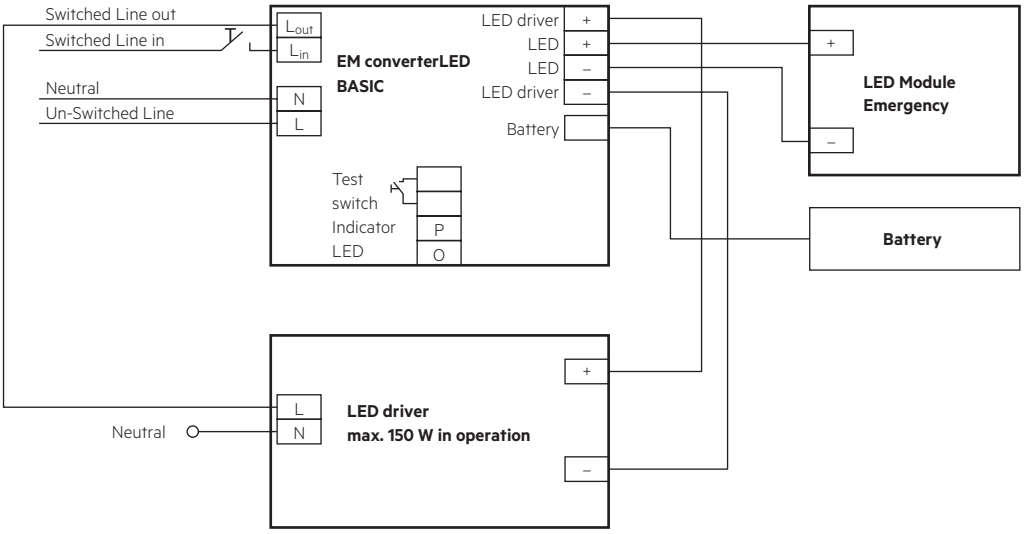

EM converterLED BASIC with a standard LED driver and <u>series</u> operation of LED modules

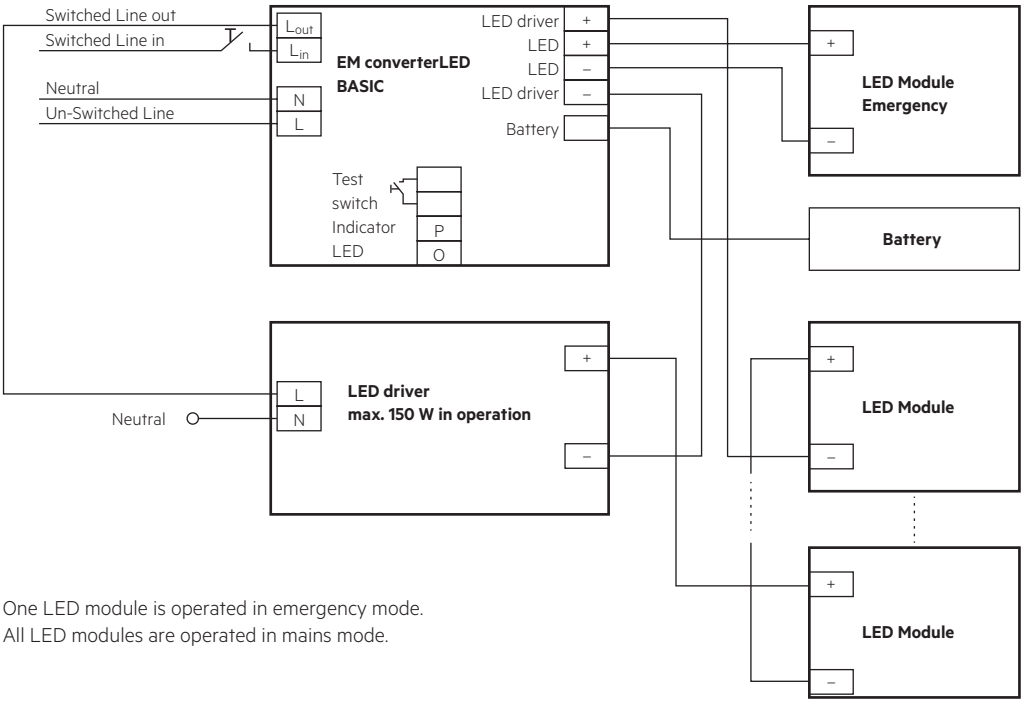

One LED module is operated in emergency mode.
All LED modules are operated in mains mode.

EM converterLED BASIC with a standard LED driver and parallel operation of LED modules

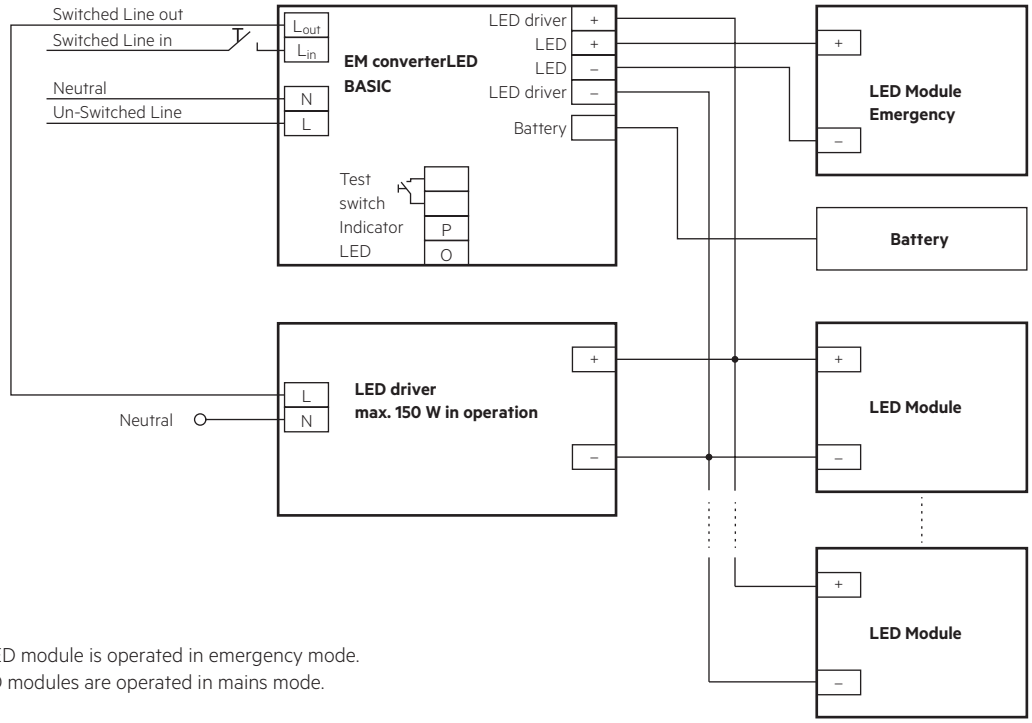

One LED module is operated in emergency mode.
All LED modules are operated in mains mode.

3.2 Wiring type and cross section

Solid wire with a cross section of 0.5 – 1.5 mm². Strip 8 – 9 mm of insulation from the cables to ensure perfect operation of terminals.

Wiring: LED module/LED driver/supply

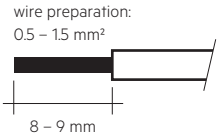

3.3 Battery connection

NiMH: Connection with extension

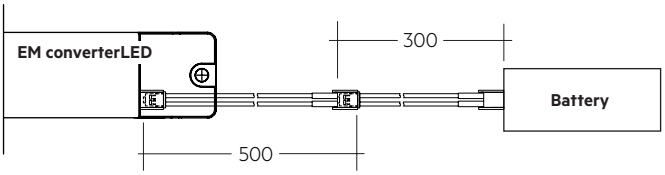

When using an EM converterLED in combination with a NiMH battery, order the CONNECTION CABLE NiMH 500mm seperately.

$LiFePO_4$: Direct connection

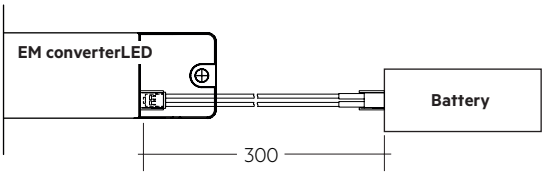

$LiFePO_4$: Connection with extension

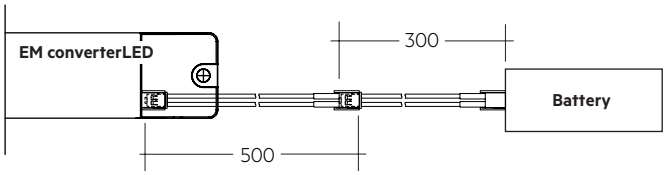

3.4 Loose wiring

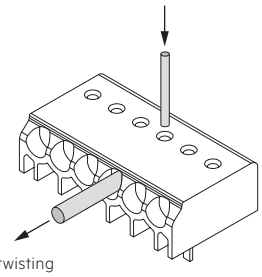

Loosen wire through twisting and pulling or using a Ø 1 mm release tool

3.5 Wiring guidelines

- The output to the LED is DC but has high frequency content, which should be considered for good EMC compliance.
- Separate LED leads from the mains and DALI connections and wiring for good EMC performance.
- Maximum lead length on the LED terminals is 3 m. For a good EMC performance keep the LED wiring as short as possible.
- Route the secondary wires (LED module) in parallel to ensure good EMC performance.
- Maximum lead length for the Test switch and Indicator LED connection is 1 m. Separate the test switch and Indicator LED wiring from the LED leads to prevent noise coupling.
- Battery leads are specified with 0.5 mm cross section and a length of 0.8 m
- Protect the wiring against short circuits to earth (sharp edged metal parts, metal cable clips, louver, etc.) to avoid the damage of the control gear.

To ensure that a luminaire containing LED emergency units complies with EN 55015 for radio frequency conducted interference in both normal and emergency mode it is essential to follow good practice in the wiring layout.

Within the luminaire route the switched and unswitched 50 Hz supply wiring as short as possible and keep it as far away as possible from the LED leads. Through wiring may affect the EMC performance of the luminaire.

Do not exceed the max. length of LED leads to the LED module. Note that the length of the EM converterLED leads to the LED module is added to the length of the leads from the LED driver to the EM converterLED module when considering the max. permitted lead length of the LED driver.

3.6 Maximum lead length

LED	3 m (6 m loop)[1]
Status indication LED	1 m
Batteries	0.8 m

[1] Note: The length of LED leads to the LED module must not be exceeded. Note that the length of the EM converterLED leads is added to the length of the leads from the LED driver to the EM converterLED module when considering max. permitted lead length of the LED driver. Leads should always be kept as short as possible.

3.7 Use of different phases

The use of different phases for switched line and unswitched line is allowed. When using different phases, the unswitched line must fail if the switched line fails. This is required to assure correct switching into emergency mode. It can be realised with a relay.

4. Mechanical values

4.1 Housing properties

- Casing manufactured from polycarbonate.
- Type of protection: IP20
- Max. torque at the mounting screws: 0.8 Nm

4.2 Mechanical data accessories

LED status indicator
- Green
- Mounting hole 6.5 mm diameter, 1 – 1.6 mm thickness
- Lead length 0.3 m / 0.6 m / 1.0 m
- Insulation rating: 90 °C
- Plug connection

Test switch
- Mounting hole 7.0 mm diameter
- Lead length 0.55 m
- Plug connection

Battery connection
- Plug connection 0.3 m
- Extension 0.5 m

5. Electrical values

5.1 Maximum loading of automatic circuit breakers

Automatic circuit breaker type	B10	B13	B16	B20	C10	C13	C16	C20	Inrush current	
Installation Ø	1.5 mm²	1.5 mm²	1.5 mm²	2.5 mm²	1.5 mm²	1.5 mm²	1.5 mm²	2.5 mm²	I_{max}	time
EM converterLED BASIC MH/LiFePO4 250V	90	130	130	130	180	260	260	260	10 A	120 µs

5.2 Insulation matrix

	Mains	Switched Live	Battery, LED, Test switch, Indicator LED	LED driver
Mains	–	•	• •	•
Switched Live	•	–	• •	•
Battery, LED, Test switch, Indicator LED	• •	• •	–	–
LED driver	•	•	–	–

• Represents basic insulation

• • Represents double or reinforced insulation

When using a non-SELV LED driver insulate the battery, LED, test switch and indicator LED in the luminaire according to the U-OUT rating of the LED driver.

5.3 Typ. LED current/voltage characteristics

The LED current in emergency mode is automatically adjusted by the EM converterLED module based on the total forward voltage of the LED modules connected and the associated battery. The start of the LED in emergency mode does not result in a current peak.

EM converterLED BASIC 202A MH/LiFePO4 250V
Article number: 89800709
NiMH batteries, 3,6 V battery voltage
780 – 840 mA battery discharge current (tolerance)
$LiFePO_4$ batteries, 3,2 V battery voltage
830 – 950 mA battery discharge current (tolerance)

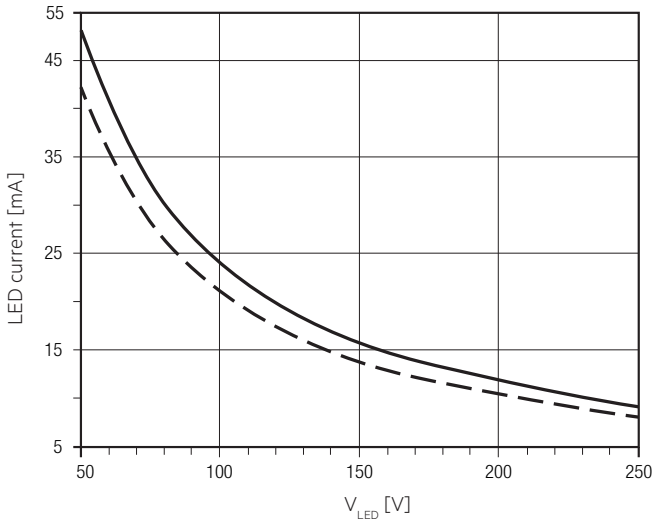

EM converterLED BASIC 203 MH/LiFePO4 250V
Article number: 89800592
NiMH batteries, 3,6 V battery voltage
840 – 900 mA battery discharge current (tolerance)

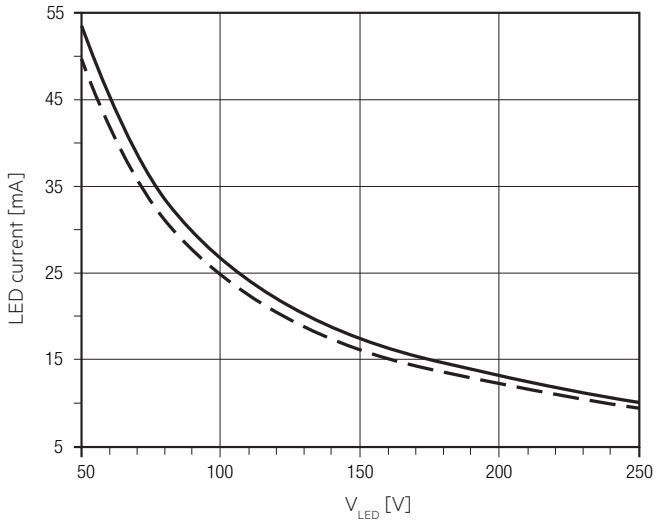

EM converterLED BASIC 203 MH/LiFePO4 250V
Article number: 89800592
$LiFePO_4$ batteries, 3,2 V battery voltage
955 – 1025 mA battery discharge current (tolerance)

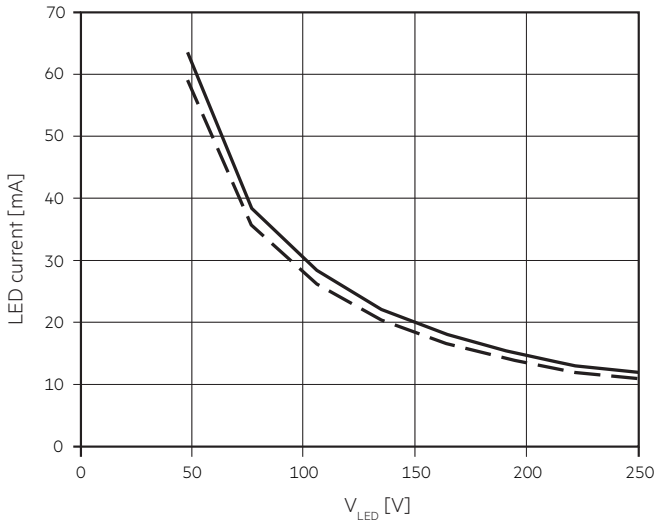

EM converterLED BASIC 204 MH/LiFePO4 250V
Article number: 89800581
NiMH batteries, 4,8 V battery voltage
850 – 910 mA battery discharge current (tolerance)

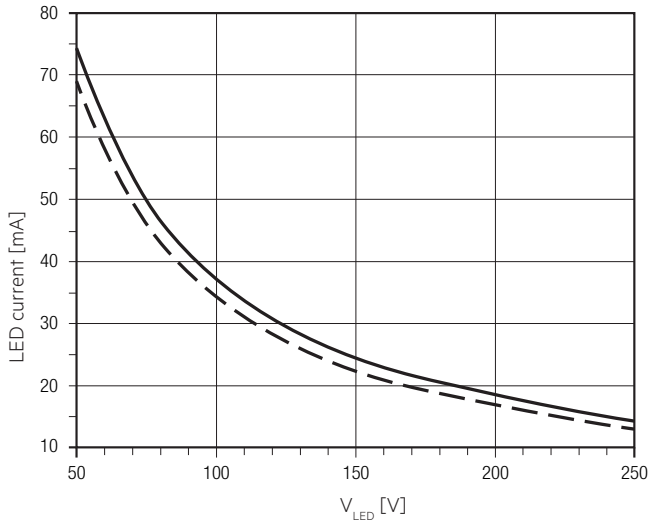

EM converterLED BASIC 204 MH/LiFePO4 250V
Article number: 89800581
$LiFePO_4$ batteries, 3,2 V battery voltage
1350 – 1450 mA battery discharge current (tolerance)

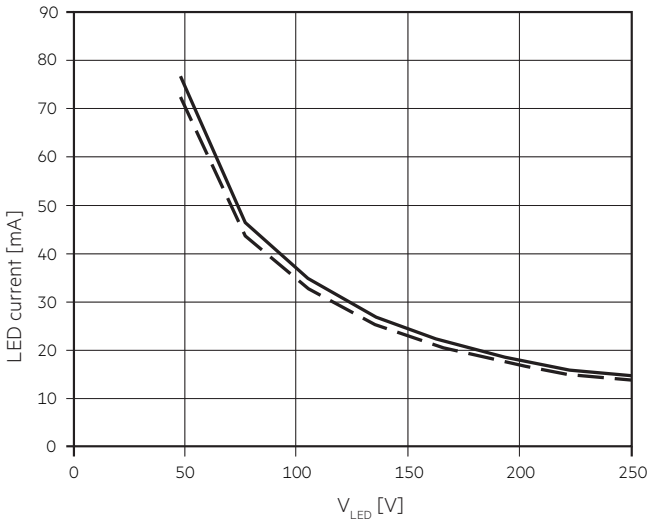

EM converterLED BASIC 205 MH/LiFePO4 250V
Article number: 89800582
NiMH batteries, 6,0 V battery voltage
860 – 920 mA battery discharge current (tolerance)
$LiFePO_4$ batteries, 3,2 V battery voltage
1770 – 1900 mA battery discharge current (tolerance)

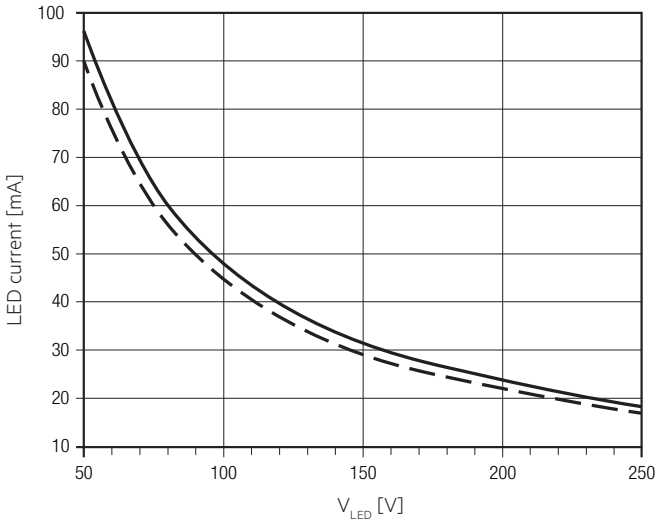

LED current at nominal battery voltage and min. battery discharge current

LED current at nominal battery voltage and max. battery discharge current

5.4 LED driver compatibility

The EM converterLED emergency unit use 3 pole technology and is compatible with most LED drivers on the market, however it is important to check that the rating of the LED driver does not exceed the values specified below:

- The max. allowed output current rating of the associated LED driver is 2 A eff (current rating of the terminals of EM converterLED) and 2.4 A peak (current rating of switching relays of EM converterLED)
- The max. allowed inrush current rating of the associated LED driver is 60 A peak for 1 ms or 84 A for 255 µs (inrush current rating of switching relay of EM converterLED)
- The max. allowed output voltage (U-OUT) of the associated LED driver applied to the EM converterLED output is 450 V (voltage withstand between adjacent contact of the single switching relay of the EM converterLED)
- The max. allowed LED load of the associated LED driver is 150 W in operation. The load must be an LED module.

Check compatibility with short function tests (duration of several seconds).

6. Functions

6.1 Duration link selection

Duration	Usage duration link
3 h	With link
1 h	Without link

Emergency lighting LED driver supplied with duration link in 3 hours position.

The position of the link will only be read on first power up. If it is changed afterwards both the battery and mains supply must be disconnected for 10 seconds to enable the EM converterLED to read the new link position on reconnection of the battery and mains. It will lead to a false battery failure indication if the link is changed after installation without this reset.

6.2 Status indication LED

System status is indicated by a green LED.

Note:
The status indication LED switches off if the battery does not reach the full capacity (3.6V battery voltage) within 20 – 24 hours.
If this occurs disconnect the mains voltage and operate the device in emergency mode for approximately one hour. Afterwards apply the mains voltage again and recharge the battery for 24 hours.
If the failure occurs again replace the battery.

7. Battery data

7.1 Battery selection

EM converterLED BASIC, 1 / 3 h

				Type	**EM converterLED BASIC 202A MH/LiFePO4 250V**		**EM converterLED BASIC 203 MH/LiFePO4 250V**		**EM converterLED BASIC 204 MH/LiFePO4 250V**		**EM converterLED BASIC 205 MH/LiFePO4 250V**	
				Article no.	**89800709**		**89800592**		**89800581**		**89800582**	
				Duration	**1 h**	**3 h**	**1 h**	**3 h**	**1 h**	**3 h**	**1 h**	**3 h**
Technology and capacity	Design	Number of cells	**Type**	**Article no.**	**Assignable batteries**							
NiMH 4 Ah LA cells	stick	1 x 3	**Accu-NiMH 4Ah 3A CON**	**89800441**		•		•				
	stick	1 x 4	**Accu-NiMH 4Ah 4A CON**	**89800442**						•		
	stick + stick	2 + 2	**Accu-NiMH 4Ah 4C CON**	**89800438**						•		
	stick + stick	2 + 3	**Accu-NiMH 4Ah 5C CON**	**89800439**								•
	remote box	1 x 3	**Pack-NiMH 4Ah 3 CON**	**28001896**		•		•				
	remote box	1 x 4	**Pack-NiMH 4Ah 4 CON**	**28001897**						•		
$LiFePO_4$ 1.5 Ah 18650 cells	stick	1 x 1	**Accu-LiFePO4 1A CON**	**28002317**	•							
	stick	1 x 2	**Accu-LiFePO4 2A CON**	**28002318**			•		•		•	
	stick	1 x 3	**Accu-LiFePO4 3A CON**	**28002320**		•						
	stick	1 x 4	**Accu-LiFePO4 4A CON**	**28002322**				•				
	stick	1 x 5	**Accu-LiFePO4 5A CON**	**28002325**						•		
	stick	1 x 6	**Accu-LiFePO4 6A CON**	**28002328**								•
	stick + stick	2 + 2	**Accu-LiFePO4 4C CON**	**28002324**				•				
	stick + stick	2 + 3	**Accu-LiFePO4 5C CON**	**28002327**						•		
	stick + stick	3 + 3	**Accu-LiFePO4 6C CON**	**28002330**								•
	side by side	2 x 1	**Accu-LiFePO4 2B CON**	**28002319**			•		•		•	
	side by side	3 x 1	**Accu-LiFePO4 3B CON**	**28002321**		•						
	side by side	4 x 1	**Accu-LiFePO4 4B CON**	**28002323**				•				
	side by side	5 x 1	**Accu-LiFePO4 5B CON**	**28002326**						•		
	side by side	6 x 1	**Accu-LiFePO4 6B CON**	**28002329**								•
	remote box	1 x 2	**PACK-LiFePO4 3.0Ah 2 CON**	**28003805**			•		•		•	
	remote box	1 x 3	**PACK-LiFePO4 4.5Ah 3 CON**	**28003806**		•						
	remote box	1 x 4	**PACK-LiFePO4 6.0Ah 4 CON**	**28003807**				•				

7.2 Battery charge / discharge data

EM converterLED BASIC, 1 / 3 h, NiMH

	Type	**EM converterLED BASIC 202A MH/LiFePO4 250V**		**EM converterLED BASIC 203 MH/LiFePO4 250V**		**EM converterLED BASIC 204 MH/LiFePO4 250V**		**EM converterLED BASIC 205 MH/LiFePO4 250V**	
	Article no.	**89800709**		**89800592**		**89800581**		**89800582**	
	Duration	**1 h**	**3 h**	**1 h**	**3 h**	**1 h**	**3 h**	**1 h**	**3 h**
Battery charge time	Initial charge	24 h							
	Fast recharge	24 h							
	Trickle charge	continuously							
Charging current	Initial charge	110 – 150 mA	190 – 230 mA	110 – 150 mA	190 – 230 mA	110 – 150 mA	190 – 230 mA	110 – 150 mA	190 – 230 mA
	Fast recharge	110 – 150 mA	190 – 230 mA	110 – 150 mA	190 – 230 mA	110 – 150 mA	190 – 230 mA	110 – 150 mA	190 – 230 mA
	Trickle charge	110 – 150 mA / 4 min. 0 mA / 16 min.	190 – 230 mA / 4 min. 0 mA / 16 min.	110 – 150 mA / 4 min. 0 mA / 16 min.	190 – 230 mA / 4 min. 0 mA / 16 min.	110 – 150 mA / 4 min. 0 mA / 16 min.	190 – 230 mA / 4 min. 0 mA / 16 min.	110 – 150 mA / 4 min. 0 mA / 16 min.	190 – 230 mA / 4 min. 0 mA / 16 min.
Discharge current		780 – 840 mA	780 – 840 mA	840 – 900 mA	840 – 900 mA	850 – 910 mA	850 – 910 mA	860 – 920 mA	860 – 920 mA
Charge voltage range[1]		0.9 – 1.65 V per cell							
Discharge voltage range		1.65 – 1.05 V per cell							

[1] The battery will be charged below 0.9 V. The EM converterLED will indicate a battery fault.

The emergency lighting LED driver will recharge the battery normally after running the test of 61347-2-7 CL 22.3 (abnormal operating conditions).

EM converterLED BASIC, 1 / 3 h, LiFePO$_4$

	Type	EM converterLED BASIC 202A MH/ LiFePO4 250V		EM converterLED BASIC 203 MH/ LiFePO4 250V		EM converterLED BASIC 204 MH/ LiFePO4 250V		EM converterLED BASIC 205 MH/ LiFePO4 250V	
	Article no.	**89800709**		**89800592**		**89800581**		**89800582**	
	Duration	**1 h**	**3 h**	**1 h**	**3 h**	**1 h**	**3 h**	**1 h**	**3 h**
Battery charge time	Initial charge	24 h							
	Fast recharge	24 h							
	Trickle charge	continuously and battery voltage controlled							
Charging current	Initial charge	115 – 155 mA	250 – 290 mA	250 – 290 mA	430 – 470 mA	250 – 290 mA	430 – 470 mA	250 – 290 mA	430 – 470 mA
	Fast recharge	115 – 155 mA	250 – 290 mA	250 – 290 mA	430 – 470 mA	250 – 290 mA	430 – 470 mA	250 – 290 mA	430 – 470 mA
	Trickle charge[1]	115 – 155 mA / 0 mA	250 – 290 mA / 0 mA	250 – 290 mA / 0 mA	430 – 470 mA / 0 mA	250 – 290 mA / 0 mA	430 – 470 mA / 0 mA	250 – 290 mA / 0 mA	430 – 470 mA / 0 mA
Discharge current		830 – 950 mA	830 – 950 mA	1,150 – 1,250 mA	1,150 – 1,250 mA	1,450 – 1,550 mA	1,450 – 1,550 mA	1,770 – 1,900 mA	1,770 – 1,900 mA
Charge voltage range[2]		2.0 – 3.65 V							
Discharge voltage range		3.65 – 2.60 V							

[1] Automatic recharge when battery voltage falls below 3.4 V. Charger off (0 mA) when battery voltage exceeds 3.6 V.

Note: Battery protected against operation at excessive temperatures (charging stopped when battery cell temperature < 0 °C or > 60 °C).

The emergency lighting LED driver will recharge the battery normally after running the test of 61347-2-7 CL 22.3 (abnormal operating conditions).

[2] The battery will not be charged below 2.0 V.

7.3 Accu-NiMH

Capacity 4.0 Ah

International designation	HRMU 19/90
Battery voltage/cell	1.2 V
Cell type	LA
Case temperature range to ensure 4 years design life	+5 °C to +50 °C
Max. short term battery case temperature (shorter than 1 month over the battery lifetime)	70 °C
Max. number discharge cycles	4 cycles per year plus 30 cycles during comissioning
Max. storage time	12 months at +5 °C to +25 °C

7.4 Accu-LiFePO4

Capacity 1.5 Ah

International designation	lFpR 19/66
Battery voltage/cell	3.2 V
Cell type	18650
Case temperature range to ensure	
4 years design life	+5 °C to +55 °C
6 years design life	+5 °C to +45 °C
8 years design life	+5 °C to +35 °C
Max. short term battery case temperature (shorter than 1 month over the battery lifetime)	70 °C
Max. number discharge cycles	50 cycles total
Max. storage time	12 months at +5 °C to +25 °C

7.5 Accupack-NiMH

Capacity 4.0 Ah

Battery voltage/cell	1.2 V
Cell type	LAL
Ambient temperature range to ensure 4 years design life	+5 °C to +35 °C
tc point	+40 °C
Max. short term battery case temperature (shorter than 1 month over the battery lifetime)	70 °C
Max. number discharge cycles	4 cycles per year plus 4 cycles during comissioning
Max. storage time	12 months

7.6 Accupack-LiFePO4

Capacity 1.5 Ah

International designation	lFpR 19/66
Battery voltage/cell	3.2 V
Cell type	18650
Case temperature range to ensure	
4 years design life	+5 °C to +45 °C
6 years design life	+5 °C to +35 °C
8 years design life	+5 °C to +25 °C
Max. short term battery case temperature (shorter than 1 month over the battery lifetime)	70 °C
Max. number discharge cycles	50 cycles total
Max. storage time	12 months at +5 °C to +25 °C

Only use Tridonic batteries.

Comply with UN 38.3 and IEC 62133 (safety testing) protected against over charge, over discharge, charging at excessive temperatures, short-circuit and over current.

7.7 Safety (LiFeGuard)

Note: LiFeGuard ensures safe and reliable battery operation by offering a comprehensive three-layered safety system.
It addresses the cell, battery pack and emergency driver.

7.7.1 Deep discharge protection

When the battery remains connected without charging for a long period of time after the battery cut off of the driver the battery voltage can still drop. To make sure the cells are not damaged by this voltage drop, the battery protection prevents the battery from further discharge below 2.0 V.

7.7.2 Overcharge protection

If in case of an error or the use of a wrong driver the battery gets overcharged the battery protection will disconnect the battery from the driver at a voltage of 3.9 V. A discharge of the battery is still possible after the protection circuit was triggered to guarantee emergency operation.

7.7.3 Short-circuit protection

In case of a short circuit the battery protection opens the connection to the driver and the output is therefore free of voltage. The output will be reactivated again when the short circuit is removed.

7.7.4 Overtemperature protection

The battery is protected against temporary thermal overheating. If the temperature limit is exceeded the further charging of the battery is no longer possible. The temperature protection is activated below approx. 0 °C and above approx. +60 °C. The discharging of the battery is still possible to guarantee emergency operation.

Battery has built in thermal sensor for safe charging. Mount battery away from heat source.
Positioning of the thermal sensor see battery data sheet.

7.8 Wiring batteries

To inhibit inverter operation disconnect the batteries by removing the connection at battery side.

For further informations refer to corresponding battery datasheet.

7.9 Storage, installation and commissioning

Relevant information about storage conditions, installation and commissioning are provided in the battery datasheets.

8. Miscellaneous

8.1 Maximum number of switching cycles

EM converterLEDs are tested with 50,000 mains switching cycles of the associated LED driver.

8.2 Battery replacement

After a battery replacement and a subsequent full charge cycle (24 h) a duration test is mandatory to prove that with the new battery the rated duration is achieved.

8.3 Mains-connected transformers

The EM converterLED does not contain mains-connected windings of transformers.

8.4 Additional information

Additional technical information at www.tridonic.com → Technical Data

Lifetime declarations are informative and represent no warranty claim.
No warranty if device was opened.